PRECISION TSUGAMI

TSUGAMI

CNC Precision Automatic Lathe

BO-Ⅱ•BM-Ⅱ Series

BO123-Ⅱ/BO203-Ⅱ
BO74-Ⅱ/BO124-Ⅱ/BO204-Ⅱ
BO125-Ⅱ/BO205-Ⅱ

BM163-Ⅱ
BM164-Ⅱ
BM165-Ⅱ

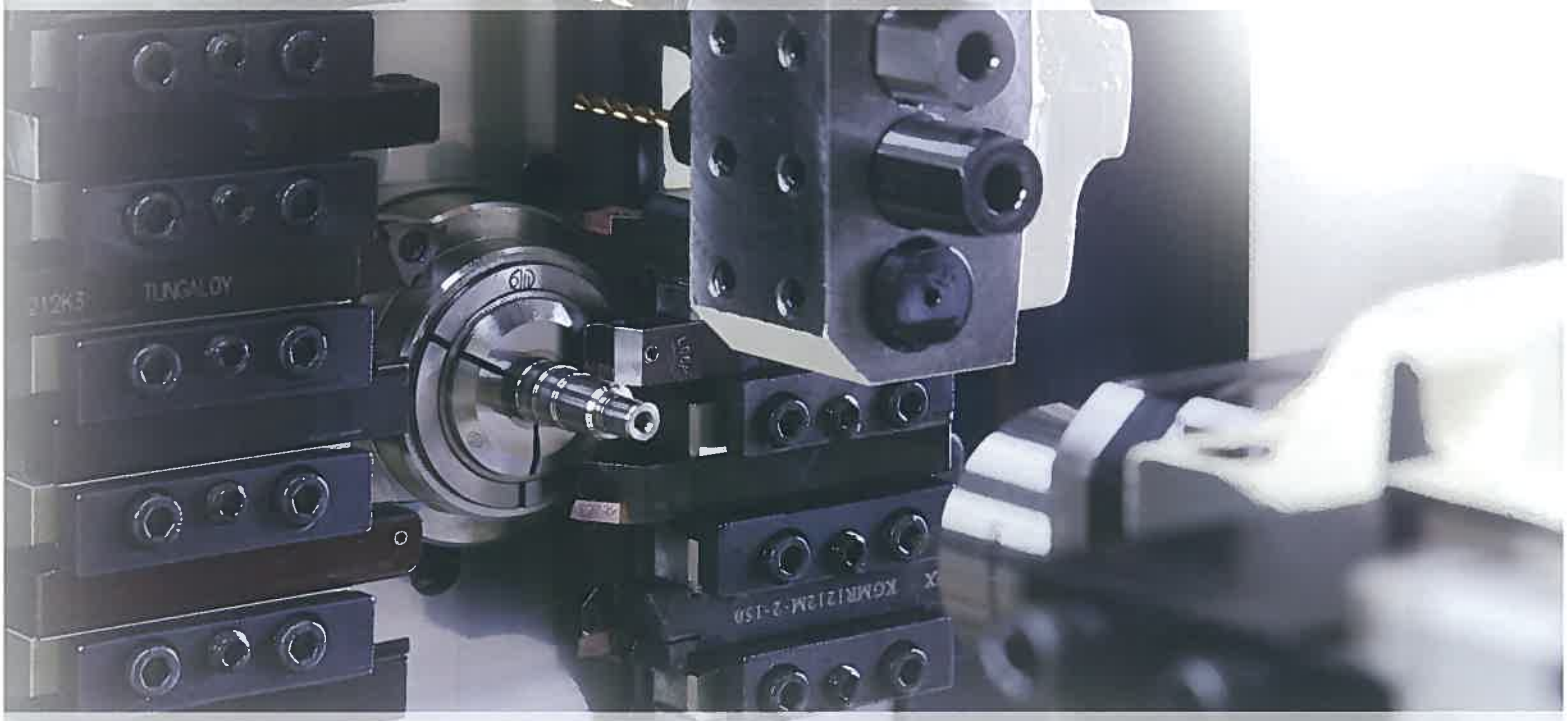

Wide selection of Swiss-turn lathes
to best suit your application

Flexible operations for high precision parts
High Performance Swiss-Turns

- Shortened cycle time
- Enlarged machining range
- Increasing machining capacity
- Higher accuracy
- Highly rigid structure
- Abundant variations

(3-axis machine)

(4-axis/5-axis machine)

Basic machines provide maximum profits for minimal investment.

B0123-Ⅱ/203-Ⅱ

Basic machine

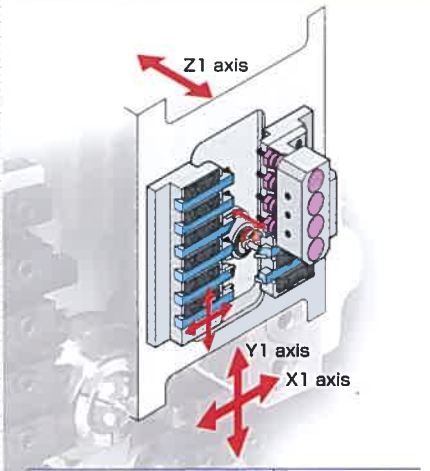

Front & back simultaneous machining		–
Back spindle		–
Cross rotary tool		OP.
Guide-bushing-less kit		OP.
Direct-drive guide bushing		OP.
C-axis		OP.
Cross rigid tap		OP.
Number of tools		
OD tool storage capacity		9
Cross-rotary		OP.
Front	Fixed	4
	Rotary	–
Back	Fixed	–
	Rotary	–
Total tool storage capacity		13

B074-Ⅱ/124-Ⅱ/204-Ⅱ

Built-in back spindle

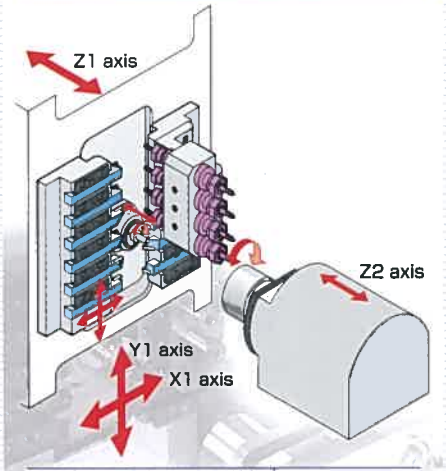

Front & back simultaneous machining		–
Back spindle		○
Cross rotary tool		OP.
Guide-bushing-less kit		OP.
Direct-drive guide bushing		OP.
C-axis		OP.
Cross rigid tap		OP.
Number of tools		
OD tool storage capacity		9
Cross-rotary		OP.
Front	Fixed	4
	Rotary	–
Back	Fixed	4
	Rotary	–
Total tool storage capacity		17

BM163-Ⅱ

Guide-bushless machine

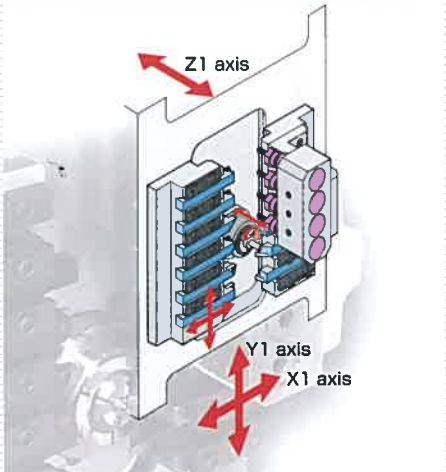

Front & back simultaneous machining		–
Back spindle		–
Cross rotary tool		OP.
C-axis		OP.
Cross rigid tap		OP.
Number of tools		
OD tool storage capacity		9
Cross-rotary		OP.
Front	Fixed	4
	Rotary	–
Back	Fixed	–
	Rotary	–
Total tool storage capacity		13

A rank higher in accuracy

BM164-Ⅱ

Guide-bushless machine

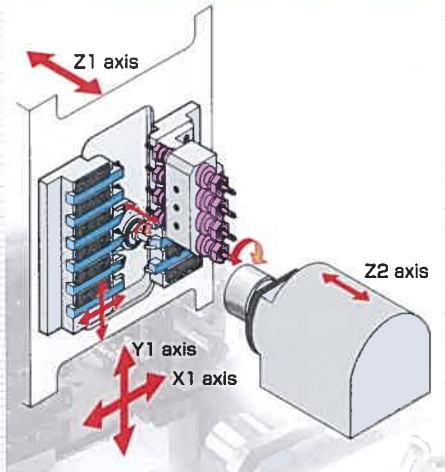

Front & back simultaneous machining		–
Back spindle		●
Cross rotary tool		OP.
C-axis		OP.
Cross rigid tap		OP.
Number of tools		
OD tool storage capacity		9
Cross-rotary		OP.
Front	Fixed	4
	Rotary	–
Back	Fixed	4
	Rotary	–
Total tool storage capacity		17

Realizing shorter cycle time

B0125-Ⅱ/205-Ⅱ

Independent back tool post

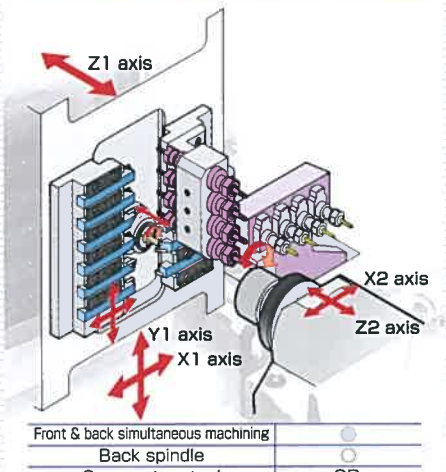

Front & back simultaneous machining		●
Back spindle		○
Cross rotary tool		OP.
Back rotary tool		OP.
Guide-bushing-less kit		OP.
Direct-drive guide bushing		OP.
C-axis		OP.
Cross rigid tap		OP.
Back rigid tapping		OP.
Number of tools		
OD tool storage capacity		9
Cross-rotary		OP.
Front	Fixed	4
	Rotary	–
Back	Fixed	8, OP.(6)
	Rotary	OP.(2)
Total tool storage capacity		21

Realizing shorter cycle time and high accuracy

BM165-Ⅱ

Guide-bushless machine

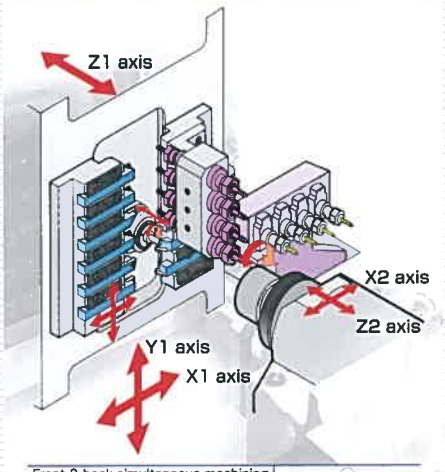

Front & back simultaneous machining		○
Back spindle		○
Cross rotary tool		OP.
Back rotary tool		OP.
C-axis		OP.
Cross rigid tap		OP.
Back rigid tapping		OP.
Number of tools		
OD tool storage capacity		9
Cross-rotary		OP.
Front	Fixed	4
	Rotary	–
Back	Fixed	8, OP.(6)*
	Rotary	OP.(2)
Total tool storage capacity		21

Note: When rotary tool (OP.) is mounted

The best selling machines with a proven track record evolved with improved functions and wide variety of software

(II): The new function and software on Type II.

Direct-drive rotary guide bushing assures an increased spindle speed.

■Maximum spindle speed: 12,000 min^{-1} (B0123-II/124-II/125-II, B074-II) 10,000 min^{-1} (B0203-II/204-II/205-II)
■Machining stroke: 170 mm (B074-II: 70 mm)
Improved form accuracy, dimensional accuracy, and surface roughness with high speed and quiet operation.
The water-soluble coolant is not available.

Front/back machining with the back spindle (driven by built-in motor)

■Improved rotation and phase synchronization accuracy with the main spindle
■The main/back spindle follow-up function enables rounding cut-off among other capabilities.


B0124-II/204-II/125-II/205-II, BM164-II/165-II back spindle

Shortened idle time

■Slide rapid traverse rate: 32 m/min
■28-mm spacing between tools means a shortened cycle time.
■The quickest controlling method drastically shortens idle time.
- ●High-speed cycle operation
- ●T/M codes and axis travel commands in one block
- ●Rotary tool speed command during axis travel
- ●Overlapped spindle indexing operation

■Reference position return at spindle indexing becomes unnecessary thanks to Direct C axis and it shortens indexing time.
■Thread cutting time is shortened by optimization of thread cutting.

Enriched NC functions

Many commonly-used functions are provided as standard.

Features such as tool nose radius compensation, chamfering and corner rounding, multiple repetitive cycle, tool geometry / wear offset, canned cycle for drilling and cut-off detection (differencial speed control) are provided as standard to reduce the total cost for customers. For details, see page 6.

Reliable and time-tested opposing gang type tool post

■Large tool capacity and quick tool change
■Conforming to design principles, the headstock and X-axis ball screw are placed horizontally to minimize thermal displacement.

Higher accuracy

■Increased rigidity of the front tool post and slideways to assure stable machining and dimensional accuracy even with a varying cutting force

Cast iron structural base

■Highly rigid cast iron base assure excellent rigidity and high-speed rotation. Soft cushioning is provided against high-speed motion.

Long-time unmanned operation

■A large-capacity chip pan enables unmanned operation for a long period of time. Work ejection and chip removal are possible even during machine operation.

Y-axis milling & turning function with cross-tool spindle

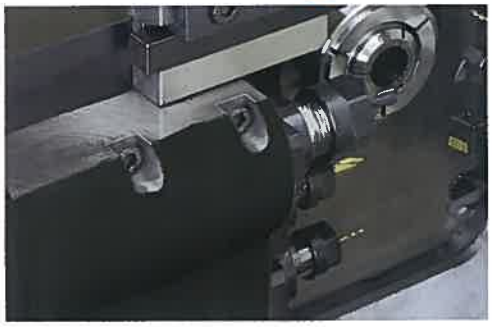

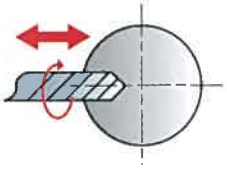

Cross drilling

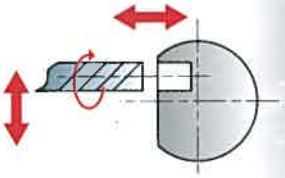

End milling
Off-center cross drilling
Tapping

(Ⅱ): The new function and software on Type Ⅱ.

Back milling operations on BO series(Optional)(Ⅱ)

On BO125-Ⅱ/205-Ⅱ, BM165-Ⅱ, back milling operations, such as off-center drilling, off-center tapping and end-milling can be performed simultaneously with main spindle machining.

■Specifications

Item	Max. speed	Max. drilling diameter	Max. tapping diameter	Motor output	Applicable collet
Specification	5,000 min^{-1}	φ6	M5	0.5 kW	AR11

	Type 1	Type 2
Rotary tool	Front: 2 spindles (non-modular type)	Cross: 1 spindle (modular type) (horizontal/vertical: cross/slotting) Front: 1 spindle (Non-modular type)
Fixed tool	2 tools	1 tool

■BO125-Ⅱ/205-Ⅱ Restriction of combination (Take note at ordering)

Rotary guide bushing		Rotary tool		Spindle indexing	
Direct driven	Carrier driven	Cross	Back	Main spindle	Back spindle
—	○	○	○	C axis	C axis
○	—	○	○	1°, 15°	1°, 15°
○	—	○	S code command Rigid tap impossible *	C axis 1°, 15°	1°, 15° C axis

Note: Cross rigid tapping and back rotary tool rigid tapping are option repectively.
Note: Up to M2.6 is possible by using tapping collet.

Type 1

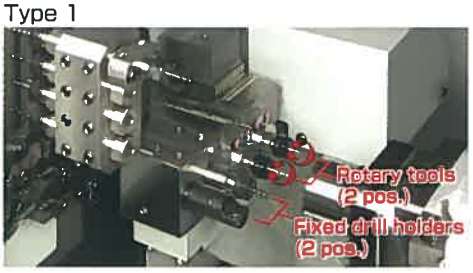

Type 2

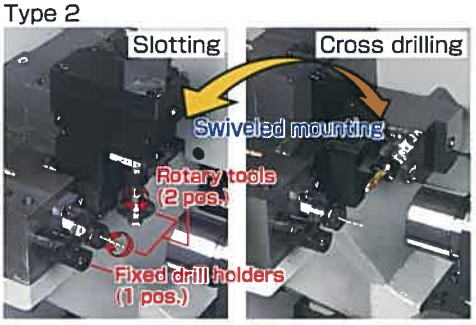

Easy to use thanks to abundant and extensive software (Standard)

■Shortened cycle time (Ⅱ)

Operations such as work catcher movement or coolant discharge during axis movement can be executed by M code command.

Axis movement command can be executed during other axis movement. Other axis is moved at a certain coordinate position, and overlapped operation is possible without interference.

■Operatability (Ⅱ)

Automatic cut-off function
Automatic facing function
Automatic workpiece discharge
} These functions work with push button or M cord automatically. Enables easy settingup.

Interference check function (checks such as the back spindle and drill holder)
Option setting screen (Setting such as optional machine data)

■Thermal displacement compensation (Ⅱ) (BO125-Ⅱ, BO205-Ⅱ, BM165-Ⅱ only)

Production is possible from non-warm-up status

■Automatic programming software

Machining motion can be checked from all points of view by 3D simulation
3D graphic simulator can be checked from all view points.

■Tool height compensation

Tool-height difference is compensated only by inputting measured value of the cutting 2 points at outer diameter in the setting screen.

■Tool life counter and periodic maintenance screen

Required tools and maintenance parts can be checked on the screen, and the messages of times for replacement and maintenance are displayed.

Increasing machining capabilities of the main spindle and back spindle (Ⅱ)

■Main spindle (bush-less/bush) (BO20-Ⅱ)

■Back spindle (BO12/20-Ⅱ, BM16-Ⅱ)

	Tapping diameter	Drilling	Tapping diameter
Conventional type	M6/M8	φ7/φ10	M6
Type Ⅱ	M10	φ10	M8

Guide bushing type or guide-bushing-less type selectable according to the workpiece

■Stationary guide bushing ■Carrier type rotary guide bushing ■Guide-bushing-less kit ■Direct-drive rotary guide bushing

■Possible to switch between the guide bushing type and guide-bushing-less type so the most suitable operation for the workpiece length can be chosen.

■The spindle without a guide bushing does not require ground bar, enabling high speed and high precision machining from cold drawn bars. The shortest possible remnant length is 30 mm.

Collet chucks and guide bushing

	Main spindle collet chuck	Back spindle collet chuck	Stationary guide bushing	Rotary guide bushing	
				Carrier type	Direct-drive type
BO74-Ⅱ	2601-1132 (T7)		2621-1132 (T7)		2621-1185 (NP17)
BO123-Ⅱ/124-Ⅱ/125-Ⅱ	2601-1185 (NP17)		2621-1185 (NP17)		
BO203-Ⅱ/204-Ⅱ/205-Ⅱ	2601-1192 (S20)	2601-1147 (S20)	2621-1147 (S20)		2621-1226 (exclusive)
BM164-Ⅱ/165-Ⅱ	2601-1135 (16SB)	2601-1185 (NP17)			
Spindle φ20 spec. (Option)		2601-1147 (S20)			

Guide bushing spindle structure

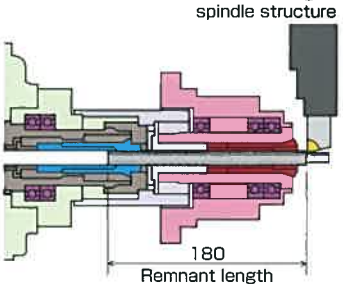

(Carrier type rotary guide bushing device)

Without a guide bushing spindle structure

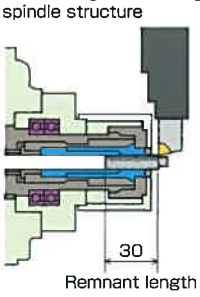

Specialized machine for miniaturizing micro precision IT-related parts B074-Ⅱ

Solid performance
A toggle is replaced with Tsugami's outstanding chuck operation mechanism, which has excellent responsibilities and balance characteristics. This contributes to improved roundness in high-rotation speed machining.

Ceramic ball bearing contributes to the improvement in the stable surface finish / surface roughness, and tool life in high-rotation speed machining.

Improved operability
Clearance of the guide bushing can be adjusted from tooling zone side.
The optimum work catcher for micro workpieces that can be discharged both from the back spindle side or cutting-off side is equipped as standard.

Realizing shorter cycle time with a little extra investment B0125-Ⅱ/205-Ⅱ・BM165-Ⅱ

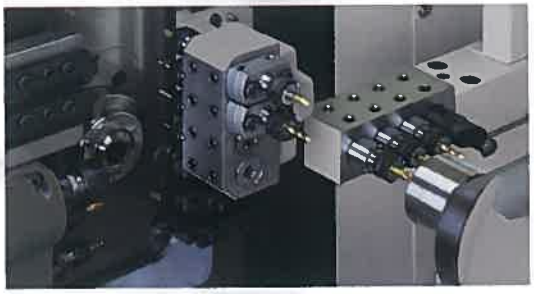

Overlapped machining shortens cycle time
Front and back overlapped machining is possible with the back spindle and the dedicated back tool post.

Up to 21 tools mountable
Versatile machining is possible using 9 OD tools, 4 ID tools, and 8 back tools.

BM163-Ⅱ・BM164-Ⅱ・BM165-Ⅱ delivers a rank higher in precision (Guide-bushless machine)

High precision assured…A ceramic ball bearing is employed to the front side of spindle to achieve high-speed rotation. The front bearing located closest to the cutting point, which enables precision machining.

Spindle ϕ20 spec. (Option)…Corresponding working barstock diameter is up to ϕ20 mm.

Options

	Name	B074-Ⅱ	B0123-Ⅱ/124-Ⅱ/125-Ⅱ B0203-Ⅱ/204-Ⅱ/205-Ⅱ	BM163-Ⅱ	BM164-Ⅱ/165-Ⅱ
Guide bushing	Stationary guide bushing	Standard	○	–	–
	Carrier type rotary guide bushing	○	○	–	–
	Direct-drive guide bushing	○	○	–	–
	Guide-bushing-less kit	–	○	Standard	Standard
Advanced function system	Main spindle C axis control	○	○	○	○
	Back spindle 15°index	○	○	–	○
	Back spindle 1°index	○	○	–	○
	3-spindle cross drill	○	○	○	○
	4-spindle cross drill	○	○	○	○
High precision system	0.1 μm resolution	Standard	○	○	○
	Coolant oil temperature controller	○	○	○	○
Coolant related	Mist catcher	○	○	○	○
	High pressure oil blow unit	○	○	○	○
	High pressure pump unit	○	○	○	○
Workpiece discharge system	Work catcher	Standard	○*2	○*2	○
	Work conveyor	–	○	○	○
	Front discharge	○	○*1	–	○
	Rear discharge	○	○*1	–	○
Chip disposal	Chip conveyor	○	○	○	○
Machine maintenance and monitoring functions	Tap breakage detection	○	○	○	○
	Cut-off detection (Touch switch type)	○	○	○	○
	Signal indicator (Triple)	○	○	○	○
Tooling parts	Adapter for non-round bar (main spindle)	○	○	–	–
	Adapter for non-round bar (back spindle)	○	○	–	○
	Collet chuck with carbide metal	○	○	○	○
	Tool set gauge	○	○	○	○
	Spindle liner	○	○	○	○
Safety and other	Coolant flow switch	○	○	○	○
	Automatic fire extinguisher	○	○	○	○
	Illumination lamp	○	○	○	○
	Bar feeder interface	○	○	○	○

Note 1: The direct drive guide bushing can not be mounted on B0123-Ⅱ and B0203-Ⅱ. Note 2: Standard for 3-axis machine (without back spindle)

NC Standard specifications

Name	B0123-Ⅱ/203-Ⅱ BM163-Ⅱ (3-axis machine)	B074-Ⅱ/124-Ⅱ/125-Ⅱ/204-Ⅱ/205-Ⅱ BM164-Ⅱ/165-Ⅱ (4-axis/5-axis machine)
Cross drill rigid tap	OP	OP
Chasing function	Standard	Standard
Continuous thread cutting	Standard	Standard
Manual pulse generator	Standard	Standard
Memory card input/output interface	Standard	Standard
RS232C input/output interface	OP	OP
Back ground editing	Standard	Standard
Run time & parts number display	Standard	Standard
Custom macro	Standard	Standard
Constant surface speed control	Standard	Standard
Spindle synchronous control (rotation/phase/tracing)	–	Standard
Tool geometry/wear offset	Standard	Standard
Programmable data input	Standard	Standard
Chamfering & corner R	Standard	Standard
Tool nose radius compensation	Standard	Standard
HRV control	Standard	Standard
Multiple repetitive cycle	Standard	Standard
Expanded program editing	Standard	Standard
Inch/metric conversion	Standard	Standard
Direct drawing dimension input	Standard	Standard
Canned cycle for drilling	Standard	Standard
Rigid tap (main spindle, back spindle)	Standard (main spindle)	Standard
Cut-off detector (differential speed detection)	–	Standard
Spindle speed fluctuation detection	Standard	Standard
Abnormal load detection	OP	OP
Manual handle retrace function	OP	OP

Standard Accessories

Name
Automatic programming software
Tool height compensation
Tool life counter
Periodic maintenance screen
Main spindle adapter
Back spindle adapter *
Door interlock
Coolant level detector
Main spindle cooling unit
Standard tools
Transit clamps
4-spindle sleeve holder
Retractable coolant nozzle
Automatic power shut off

Note: Except in case of 3-axis machine (without back spindle)

Tooling zone

B074-II/123-II/124-II/203-II/204-II

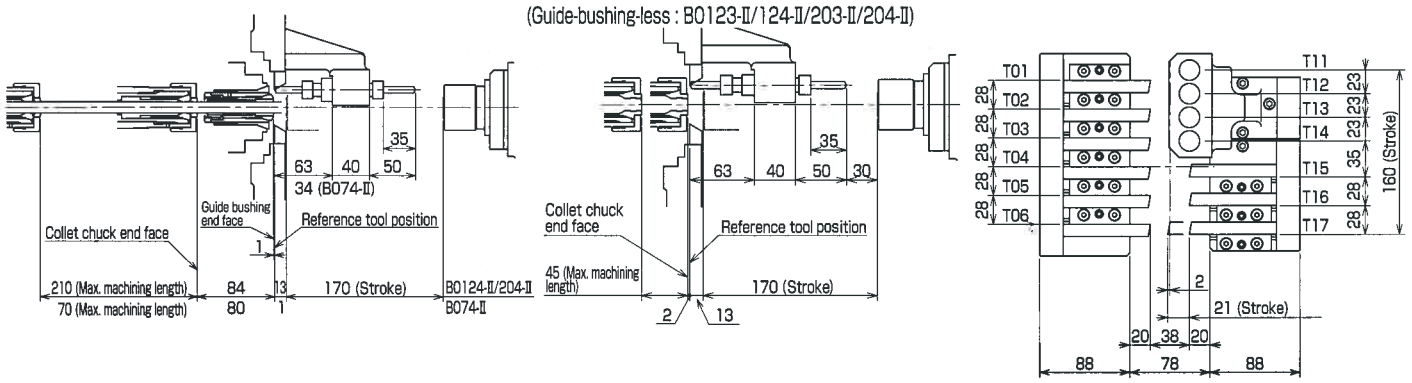

B0125-II/205-II

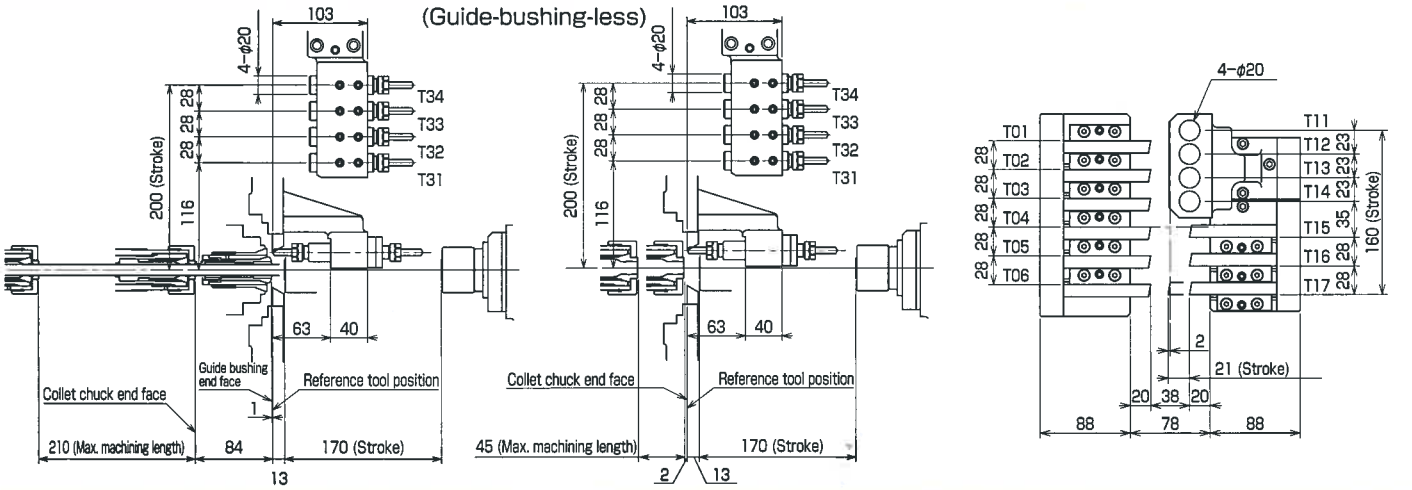

BM163-II/164-II

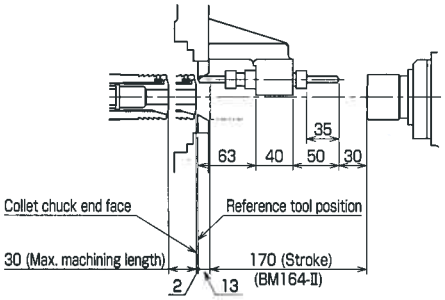

BM165-II

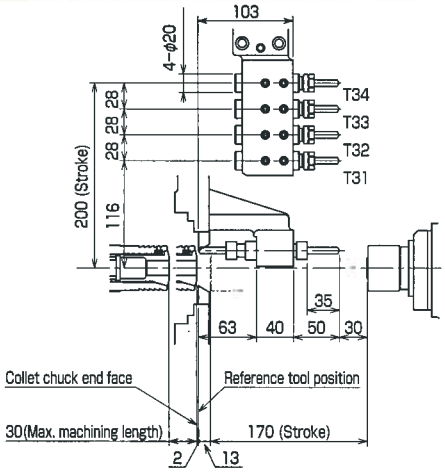

External View

B0125-II/205-II BM165-II
B074-II/124-II/204-II BM163-II/164-II

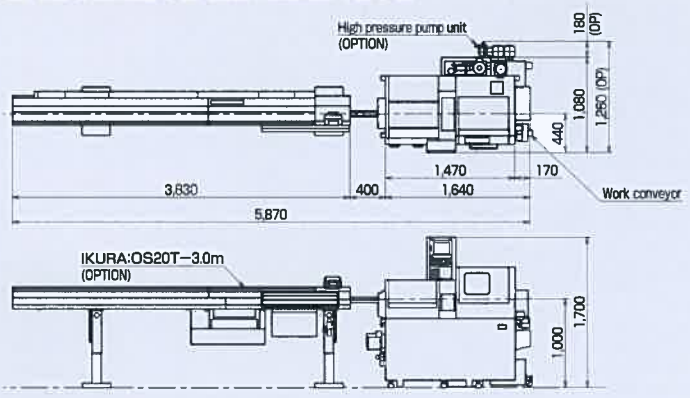

B0123-II/203-II

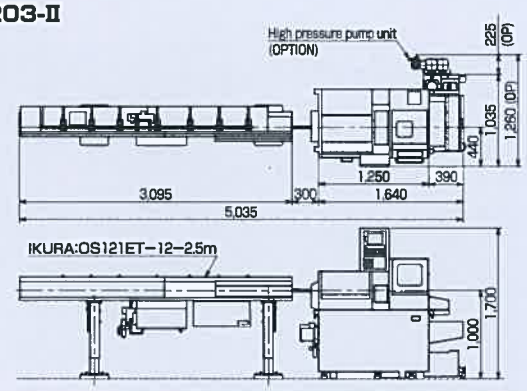

Machine standard specifications

Name		B074-II	B0123-II	B0124-II	B0203-II	B0204-II	BM163-II	BM164-II	B0125-II	B0205-II	BM165-II
Machining range, machining capacity	Working barstock diameter	ϕ1 to ϕ7 mm	ϕ3 to ϕ12 mm		ϕ3 to ϕ20 mm		ϕ3 to ϕ16 mm		ϕ3 to ϕ12 mm	ϕ3 to ϕ20 mm	ϕ3 to ϕ16 mm
	Max. machining length	70 mm (40 mm: Rotary guide bushing)	210 mm (80/170 mm: Rotary guide bushing) / 45 mm (Non-guide bushing)				30 mm		210 mm (80/170 mm: Rotary guide bushing) / 45 mm (Non-guide bushing)		30 mm
	Max. main spindle drilling diameter	ϕ4	ϕ7		ϕ10		ϕ7		ϕ7	ϕ10	ϕ7
	Max. main spindle tapping diameter	M4 x 0.7	M6 x 1		M10(II)		M6 x 1		M6 x 1	M10(II)	M6 x 1
	Max. back spindle barstock dia.	ϕ7	—	ϕ12	—	ϕ20	—	ϕ16	ϕ12	ϕ20	ϕ16
	Max. back spindle drilling diameter	ϕ4	—	ϕ7	—	ϕ8	—	ϕ7	ϕ7	ϕ8	ϕ7
	Max. back spindle tapping diameter	M4 x 0.7	—	M8(II)	—	M8(II)	—	M8(II)	M8(II)		M8(II)
	Max cross drilling diameter	ϕ4 (OP.)	ϕ6 (OP.)				ϕ6 (OP.)		ϕ6 (OP.)		ϕ6 (OP.)
	Max cross tapping diameter	M4 x 0.7 (OP.)	M5 x 0.8 (OP.)				M5 x 0.8 (OP.)		M5 x 0.8 (OP.)		M5 x 0.8 (OP.)
	Max back drilling diameter	—	—				—		ϕ6 (OP.)		ϕ6 (OP.)
	Max back tapping diameter	—	—				—		M5 (OP.)		M5 (OP.)
Machine	Main spindle speed	200 to 15,000 min^{-1}	200 to 12,000 min^{-1}		200 to 10,000 min^{-1}		200 to 12,000 min^{-1}		200 to 12,000 min^{-1}	200 to 10,000 min^{-1}	200 to 12,000 min^{-1}
	Back spindle speed※	200 to 10,000 min^{-1}	—	200 to 12,000 min^{-1}	—	200 to 12,000 min^{-1}	—	200 to 12,000 min^{-1}	200 to 12,000 min^{-1}		200 to 12,000 min^{-1}
	Total tool storage capacity	17 tools	13 tools	17 tools	13 tools	17 tools	13 tools	17 tools	21 tools		21 tools
	Tool size	8 mm x 8 mm x 85 mm	12 mm x 12 mm x 85 mm				12 mm x 12 mm x 85 mm		12 mm x 12 mm x 85 mm		12 mm x 12 mm x 85 mm
	Rapid traverse rate	32 m/min (X1: 24 m/min)	32 m/min (X1: 24 m/min)				32 m/min (X1: 24 m/min)		32 m/min (X1: 24 m/min)		32 m/min (X1: 24 m/min)
	Controlled axes	4 axes	3 axes	4 axes	3 axes	4 axes	3 axes	4 axes	5 axes		5 axes
Motors	Main spindle	1.1/1.5 kW	1.5/2.2 kW		2.2/3.7 kW		2.2/3.7 kW		1.5/2.2 kW	2.2/3.7 kW	2.2/3.7 kW
	Back spindle	0.55/1.1 kW	—	1.5/2.2 kW	—	1.5/2.2 kW	—	1.5/2.2 kW	1.5/2.2 kW		1.5/2.2 kW
	X1-,X2-,Y1-,Z1-,Z2-axis	0.5 kW	0.5 kW				0.5 kW		0.5 kW		0.5 kW
	Cross drill	0.5 kW (OP.)	0.5 kW (OP.)				0.5 kW (OP.)		0.5 kW (OP.)		0.5 kW (OP.)
	Coolant pump	0.18 kW	0.18 kW				0.18 kW		0.18 kW		0.18 kW
	Lubricating oil pump	3 W	3 W				3 W		3 W		3 W
Power source and other	Net weight	1,700 kg	1,400 kg	1,700 kg	1,400 kg	1,700 kg	1,400 kg	1,700 kg	1,700 kg		1,700 kg
	Power source requirment	9 KVA	7 KVA	10 KVA	7 KVA	10 KVA	7 KVA	10 KVA	11 KVA		11 KVA
	Compressed air requirement	0.4 MPa or above	0.4 MPa or above				0.4 MPa or above		0.4 MPa or above		0.4 MPa or above
	Air discharge rate	30 NL/min	30 NL/min				30 NL/min		30 NL/min		30 NL/min
	Coolant tank capacity	115 L	115 L				115 L		115 L		115 L
	Width x depth x height	1,640 x 1,035 x 1,700	1,640 x 1,035 x 1,700				1,640 x 1,035 x 1,700		1,640 x 1,080 x 1,700		1,640 x 1,080 x 1,700

※ 1: When the front discharge unit is mounted, the back spindle speed is restricted.

NC Standard specifications

Name	B0123-II/203-II	BM163-II	B074-II/124-II/204-II	BM164-II	B0125-II/205-II	BM165-II
NC unit	FANUC 0i-TD					
Controlled axes	3 axes		4 axes		5 axes	
Axis names	X1,Z1,Y1		X1,Y1,Z1,Z2		X1,X2,Y1,Z1,Z2	
Least input increment	0.001 mm (X in diameter) (B074-II: 0.0001 mm)					
Least command increment	X: 0.0005 mm, other: 0.001 mm (B074-II: X: 0.00005 mm, other: 0.0001 mm)					
Maximum programmable value	±8 digits					
Interpolation method	Linear, circular					
Rapid traverse rate	32 m/min (X1: 24m/min)					
Feedrate	1 to 6,000 mm/min					
Feedrate override	0 to 150 % in 10 % increments					
Dwell	G04 0 to 99999.99					
ABS/INC command	X,Y,Z: absolute, U,V,W: Incremental					
Tool offset value	±6 digits					
Tool offset pairs	64					
LCD/MDI	8.4" color LCD					
Display language	English					
Part program storage size	512 kbyte (equivalent to 1,280 m tape for each path system)		1 Mbyte (equivalent to 2,560 m tape for each path system) *sum of main and back spindle NCs			
Registable programs	400		800 *sum of main and back spindle NCs			
Miscellaneous functions	M5-digits					
Spindle function	S5-digits					
Tool function	T4-digits					

Export permission by the Japanese Government may be required for exporting our products in accordance with the Foreign Exchange and Foreign Trade Law. Please contact our sales office before exporting our products.

The specifications of this catalogue are subject to change without prior notice.

PTW

TSUGAMI CORPORATION

12-20, TOMIZAWA-CHO, NIHONBASHI,
CHUO-KU, TOKYO 103-0006, JAPAN
Phone : 03-3808-1172
Facsimile : 03-3808-1175

CAT.NO.E111488.OCT.5T(H)